Remote Lamp Heads

6, 12, or 24 V Tungsten and Halogen Lamps

Thermoplastic Wedge Base Round Heads

Constructed of impact-resistant, UL 94 V-0, 5 VA thermoplastic. Available in white or black with optional matching mounting plates. Available with sealed beam Par 36, wedge base or bi-pin tungsten or halogen lamps. Lamps can be easily replaced by removing the snap-in retainer ring.

Polycarbonate Rectangular Wedge Base Heads

Constructed of polycarbonate and available in white or black with optional matching mounting plates. Features 6 or 12 V tungsten T-5 wedge base or bi-pin lamps. Lamps can be easily replaced by removing the prismatic diffuser.

Metal Chrome Sealed Beam PAR 36 Heads

Constructed of chrome-plated steel and available with 6, 12, or 24 V Par 36 sealed beam tungsten or halogen lamps. Required for Chicago and New York City approved units with lamp wattages not less than 12 W. Lamps can be easily replaced by removing the snap ring.

Heavy Industrial Duty Sealed Beam PAR 36 Heads

Available for NEMA or Class I, Division 2 applications. Constructed of gray polycarbonate and available with 6 or 12 V Par 36 sealed beam tungsten or halogen lamps. Optional shatterproof lens available for food service applications. Lamp heads are fully gasketed and can be easily replaced by removing the ring bezel.

* See mounting plates spec sheet for compatible mounting plates.

Job Information	**Type:**
Job Name:	
Cat. No.:	
Notes:	

PHILIPS LIGHTOLIER

Remote Lamp Heads

6, 12, or 24 V Tungsten and Halogen Lamps

Thermoplastic Wedge Base Round Heads

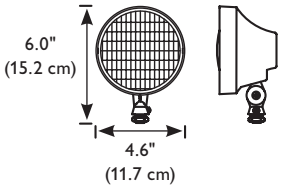

			CATALOG NUMBER THERMOPLASTIC		REPLACEMENT LAMP NO.	
	VOLTAGE	WATTAGE	WHITE	BLACK	LIGHTOLIER NO.	ANSI NO.
TUNGSTEN	6 V	5.4	**RT66W**	**RT66B**	19-2-54	939
		7.2	**RT76W**	**RT76B**	19-2-58	927
		9.0	**RT96W**	**RT96B**	19-2-45	908
	12 V	9.0	**RT912W**	**RT912B**	19-2-53	915
		12.5	**RT1212W**	**RT1212B**	19-2-62	922
		17.9	**RT1812W**	**RT1812B**	19-2-61	921
HALOGEN	6 V	8.0	**RH76W**	**RH76B**	19-2-31	ERM
		10.0	**RH106W**	**RH106B**	19-2-36	ERN
		12.0	**RH126W**	**RH126B**	19-2-29	ERK
	12 V	12.0	**RH1212W**	**RH1212B**	19-2-32	ERB

Polycarbonate Rectangular Wedge Base Heads

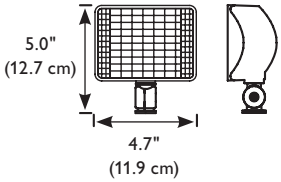

			CATALOG NUMBER POLYCARBONATE		REPLACEMENT LAMP NO.	
	VOLTAGE	WATTAGE	WHITE	BLACK	LIGHTOLIER NO.	ANSI NO.
TUNGSTEN	6 V	5.4	**S66W**	**S66B**	19-2-54	939
		7.2	**S76W**	**S76B**	19-2-58	927
		9.0	**S96W**	**S96B**	19-2-45	908
	12 V	9.0	**S912W**	**S912B**	19-2-53	915
		12.5	**S1212W**	**S1212B**	19-2-62	922
		18.0	**S1812W**	**S1812B**	19-2-61	921

Thermoplastic and Metal Chrome Sealed Beam PAR 36 Heads

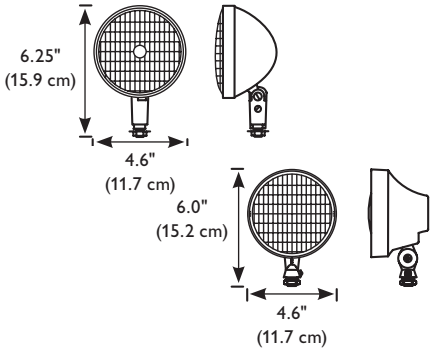

			CATALOG NUMBER METAL	CATALOG NUMBER THERMOPLASTIC		REPLACEMENT LAMP NO.	
	VOLTAGE	WATTAGE	CHROME	WHITE	BLACK	LIGHTOLIER NO.	ANSI NO.
TUNGSTEN	6 V	8.0	**CT86**	**PT86W**	**PT86B**	19-1-7613	7613
		18.0	**CT186**	**PT186W**	**PT186B**	19-1-4014	4014
		25.0	**CT256**	**PT256W**	**PT256B**	19-1-4510	4510
		30.0	**CT306**	**PT306W**	**PT306B**	19-1-4515	4515
	12 V	12.0	**CT1212**	**PT1212W**	**PT1212B**	19-1-4044	4044
		18.0	**CT1812**	**PT1812W**	**PT1812B**	19-1-4414	4414
		25.0	**CT2512**	**PT2512W**	**PT2512B**	19-1-4446	4446
		30.0	**CT3012**	**PT3012W**	**PT3012B**	19-1-4405	4405
	24 V	50.0	**HP**			19-1-4593	4593
HALOGEN	6 V	8.0	**CH86**	**PH86W**	**PH86B**	19-1-7551	7551
		12.0	**CH126**	**PH126W**	**PH126B**	19-1-7553	7553
	12 V	8.0	**CH812**	**PH812W**	**PH812B**	19-1-7555	7555
		12.0	**CH1212**	**PH1212W**	**PH1212B**	19-1-7557	7557
		30.0	**CH3012**			19-1-H4405	
		50.0	**CH5012**			19-1-H7604	7604
		50.0	**CH5012F**			19-1-7614	7614

Heavy Industrial Duty Sealed Beam PAR 36 Heads

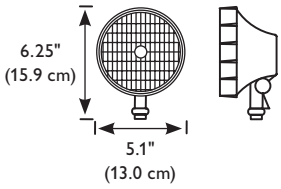

			CATALOG NUMBER* CLASS I DIV 2	CATALOG NUMBER* NEMA RATED	REPLACEMENT LAMP NO.	
	VOLTAGE	WATTAGE	GRAY	GRAY	LIGHTOLIER NO.	ANSI NO.
TUNGSTEN	6 V	8.0	**HT86**	**IT86**	19-1-7613	7613
		18.0	**HT186**	**IT186**	19-1-4014	4014
		25.0	**HT256**	**IT256**	19-1-4510	4510
		30.0		**IT306**	19-1-4515	4515
	12 V	12.0	**HT1212**	**IT1212**	19-1-4044	4044
		18.0	**HT1812**	**IT1812**	19-1-4414	4414
		25.0	**HT2512**	**IT2512**	19-1-4446	4446
		30.0		**IT3012**	19-1-4405	4405
HALOGEN	6 V	6.0	**HH66**	**IH66**	19-1-7556	7556
		8.0	**HH86**	**IH86**	19-1-7551	7551
		12.0	**HH126**	**IH126**	19-1-7553	7553
	12 V	8.0	**HH812**	**IH812**	19-1-7555	7555
		12.0	**HH1212**	**IH1212**	19-1-7557	7557
		50.0		**IH50**	19-1-H7604	7604
		50.0		**IH50F**	19-1-7614	7614

* To order shatter-resistant lamp heads, add the suffix "s" to the selected head type.

Philips Lightolier
e: lol.webmaster@philips.com
t: (508) 679-8131
w: www.lightolier.com

RH March 26, 2012

Job Information **Type:**

Specifications are subject to change without notice.
© Koninklijke Philips Electronics N.V., 2012. All rights reserved.