Calculite® Evolution Incandescent Lensed Downlight **C4P20GD**

4 1/2" Aperture PAR20 Glasslite

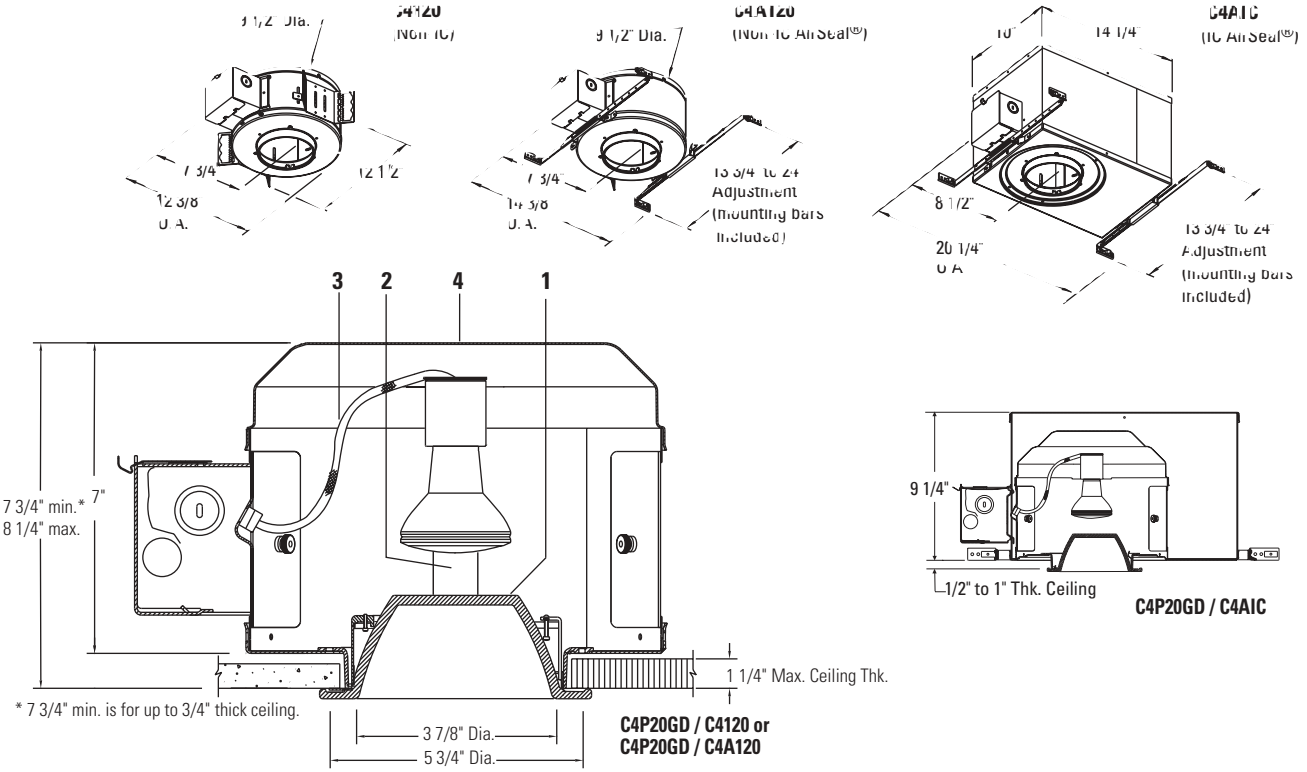

Ceiling Cutout: 5 1/16" Dia.

Glasslite Trim	Frame-In Kit		
C4P20GD Etched White Interior and Flange.	Non-IC 120V	Non-IC AirSeal® 120V	IC-AirSeal® 120V
	C4120 50W PAR20 75W PAR16	**C4A120** 50W PAR20 75W PAR16	**C4AIC** 50W PAR20 75W PAR16

Features

1. **Glasslite:** One piece borosilicate glass with integral flange, etched interior and white ceramic coated exterior. Etched white cone finish emits a subtle glow. Hinged, and snaps onto lampholder assembly for easy tool-less installation. Interchangeable with other Evolution 4 1/2" line voltage trims. Suitable for spas, hot tubs and other wet environments.
2. **Lampholder Assembly:** Provides 360° horizontal rotation; lockable. Matte black finish.
3. **Socket Harness:** Medium base porcelain socket with nickel plated screw shell, No. 18 SF-1 leads, and keyed plug-in quick connector for power connection to junction box.
4. **Frame-In-Kit:** Compatible Frame-In Kits are listed above. See separate Frame-In Kit specification sheets for details.
   Non-IC and Non-IC AirSeal® - Insulation must be kept 3" away from fixture sides and wiring compartments and must not be placed above fixture in a manner which will entrap heat.
   IC-AirSeal® - Fixture may be in direct contact with insulation.

Labels

UL Listed (suitable for wet locations), I.B.E.W.

Job Information **Type:**

Job Name:

Cat. No.:

Lamp(s):

Notes:

Lightolier a Genlyte Thomas Company www.lightolier.com
631 Airport Road, Fall River, MA 02720 • (508) 679-8131 • Fax (508) 674-4710
We reserve the right to change details of design, materials and finish.
© 2002 Genlyte Thomas Group LLC (Lightolier Division) • A0902

LIGHTOLIER®

CERTIFIED TEST REPORT NO. 1567FR
COMPUTED BY LSI PROGRAM **TEST-LITE**

CALCULITE 4 1/2" DIA. APERTURE PAR LAMP GLASS DOWNLIGHT
CAT. #C4P20GD, WHITE CERAMIC COATED
75W PAR16 SYLVANIA NFL LAMP. LUMEN RATING = 900 LMS.

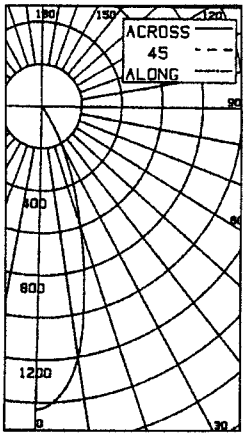

CANDLEPOWER SUMMARY

ANGLE	MEAN CP	LUMENS
0	1431	
5	1372	128
10	1201	
15	881	252
20	589	
25	369	175
30	190	
35	66	53
40	15	
45	11	9
50	9	
55	8	7
60	7	
65	5	5
70	4	
75	2	3
80	1	
85	0	0
90	0	

DATE: NOV. 23, 2001
PREPARED FOR
LIGHTOLIER, FALL RIVER, MA

ZONAL LUMENS AND PERCENTAGES

ZONE	LUMENS	% LAMP	% LUMINAIRE
0-30	555	61.71	87.79
0-40	608	67.58	96.13
0-60	624	69.38	98.69
0-90	632	70.30	100.00
40-90	24	2.72	3.87
60-90	8	.92	3.87
90-180	0	.00	1.31
0-180	632	70.30	100.00

** EFFICIENCY = 70.3% **

TESTED ACCORDING TO IES PROCEDURES. TEST DISTANCE EXCEEDS FIVE TIMES THE GREATEST LUMINOUS OPENING OF LUMINAIRE.

COEFFICIENTS OF UTILIZATION
% EFFECTIVE CEILING CAVITY REFLECTANCE

ROOM CAVITY RATIO	80			70			50			30			10			0
	% WALL REFLECTANCE															
	50	30	10	50	30	10	50	30	10	50	30	10	50	30	10	0
1	.80	.78	.77	.78	.77	.76	.75	.74	.74	.73	.72	.71	.70	.70	.69	.68
2	.76	.74	.72	.75	.73	.71	.72	.71	.70	.71	.69	.68	.69	.68	.67	.66
3	.73	.70	.68	.72	.70	.68	.70	.68	.67	.69	.67	.66	.67	.66	.65	.64
4	.70	.68	.66	.69	.67	.65	.68	.66	.64	.67	.65	.64	.66	.64	.63	.62
5	.68	.65	.63	.67	.64	.62	.66	.63	.62	.65	.63	.61	.64	.62	.61	.60
6	.65	.62	.61	.65	.62	.60	.64	.62	.60	.63	.61	.59	.62	.60	.59	.58
7	.63	.60	.58	.63	.60	.58	.62	.59	.58	.61	.59	.57	.60	.59	.57	.56
8	.61	.58	.56	.60	.58	.56	.60	.58	.56	.59	.57	.56	.59	.57	.55	.55
9	.59	.56	.54	.59	.56	.54	.58	.56	.54	.58	.55	.54	.57	.55	.54	.53
10	.57	.54	.52	.57	.54	.52	.56	.54	.52	.56	.54	.52	.56	.53	.52	.51

20% FLOOR CAVITY REFLECTANCE

CERTIFIED TEST REPORT NO. 1568FR
COMPUTED BY LSI PROGRAM **TEST-LITE**

CALCULITE 4 1/2" DIA. APERTURE PAR LAMP GLASS DOWNLIGHT
CAT. #C4P20GD, WHITE CERAMIC COATED
50W PAR20 SYLVANIA NFL LAMP. LUMEN RATING = 530 LMS.

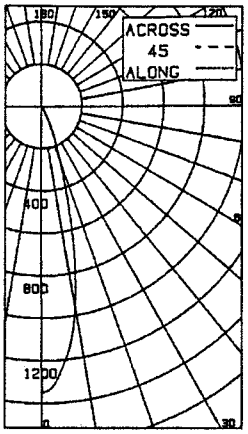

CANDLEPOWER SUMMARY

ANGLE	MEAN CP	LUMENS
0	1347	
5	1228	114
10	963	
15	552	165
20	261	
25	111	60
30	40	
35	15	12
40	8	
45	4	4
50	4	
55	3	2
60	2	
65	1	1
70	0	
75	0	0
80	0	
85	0	0
90	0	

DATE: NOV. 23, 2001
PREPARED FOR
LIGHTOLIER, FALL RIVER, MA

ZONAL LUMENS AND PERCENTAGES

ZONE	LUMENS	% LAMP	% LUMINAIRE
0-30	339	63.99	94.55
0-40	351	66.28	97.33
0-60	357	67.48	99.70
0-90	358	67.68	100.00
40-90	7	1.40	2.07
60-90	1	.20	.30
90-180	0	.00	.00
0-180	358	67.68	100.00

** EFFICIENCY = 67.7% **

TESTED ACCORDING TO IES PROCEDURES. TEST DISTANCE EXCEEDS FIVE TIMES THE GREATEST LUMINOUS OPENING OF LUMINAIRE.

COEFFICIENTS OF UTILIZATION
% EFFECTIVE CEILING CAVITY REFLECTANCE

ROOM CAVITY RATIO	80			70			50			30			10			0
	% WALL REFLECTANCE															
	50	30	10	50	30	10	50	30	10	50	30	10	50	30	10	0
1	.77	.76	.75	.76	.75	.74	.73	.73	.72	.71	.70	.70	.69	.68	.68	.68
2	.74	.73	.71	.73	.72	.71	.71	.70	.69	.69	.68	.68	.68	.67	.66	.65
3	.72	.70	.68	.71	.69	.68	.70	.68	.67	.68	.67	.66	.67	.66	.65	.64
4	.70	.68	.66	.69	.67	.66	.68	.66	.64	.67	.65	.64	.66	.64	.63	.62
5	.68	.65	.64	.67	.65	.64	.66	.64	.63	.65	.64	.62	.64	.63	.62	.61
6	.66	.64	.62	.66	.64	.62	.65	.63	.62	.64	.63	.61	.63	.62	.61	.60
7	.64	.62	.61	.64	.62	.60	.63	.61	.60	.63	.61	.60	.62	.61	.60	.59
8	.63	.61	.59	.62	.60	.59	.62	.60	.59	.61	.60	.58	.61	.59	.58	.58
9	.62	.59	.58	.61	.59	.58	.61	.59	.57	.60	.58	.57	.60	.58	.57	.57
10	.60	.58	.56	.60	.58	.56	.59	.58	.56	.59	.57	.56	.59	.57	.56	.55

20% FLOOR CAVITY REFLECTANCE

LIGHTOLIER®

Job Information **Type:**

Lightolier a Genlyte Thomas Company www.lightolier.com
631 Airport Road, Fall River, MA 02720 • (508) 679-8131 • Fax (508) 674-4710
We reserve the right to change details of design, materials and finish.
© 2002 Genlyte Thomas Group LLC (Lightolier Division) • A0902